EHRET

Aluminium sliding shutters

with/without motorisation

Order form and planning tool

Measuring instructions

- Standard sash projection: at top 30 mm, at side 40 mm
- Selection and quantity of bottom guide relate to the shutter guide type selected and the standard requirement; deviations must be entered under "Additional information"
- When determining the sash height, please note the carrier variants and shutter guide types (drawings)

Horizontal/vertical connections

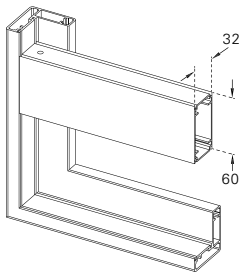

Horizontal cross-panel
Q60, 60 mm

1001

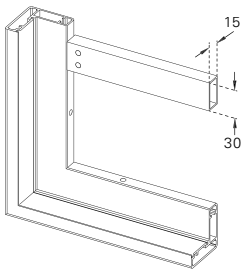

Horizontal cross-panel
QMAX15/37, 30 × 15 mm

1007

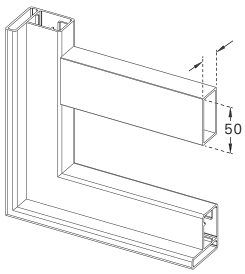

Horizontal cross-panel
QMAX28/70, 50 × 25 mm

1008

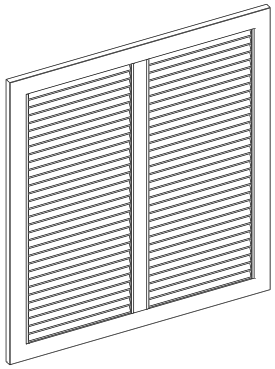

Vertical cross-panel
60 mm

2001

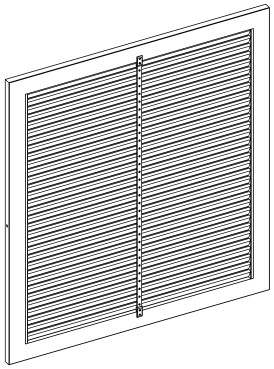

Support profile for JS, MS, PARIS, installed from the inside

8055

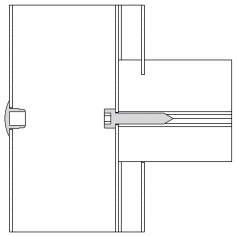

Slat screw channel
(SUN-L54, PARIS, SL slats)

1010

Maximum sizes

Frame	Name of model	Width min.	Width max.	Vertical cross-panel from width	Instead of vertical cross-panel	Height min.	Height max.	Horizontal cross-panel from height	Instead of horizontal cross-panel	Weight kg / m²	Lower guide type	Horizontal cross-panel / vertical cross-panel
R75	GE/GE-SE	550	2200	1200	-	800	3000	2200	-	10	A, B, D	Q60
	SR	550	2200	1200	-	800	3000	2200	-	9	A, B, D	Q60
	JS/ES	550	2200	1100	(5)	800	3000	2200	(6)	9	A, B, D	Q60
	MS/EMS	550	2200	1100	(5)	800	3000	2200	(6)	9	A, B, D	Q60
	PARIS	550	2200	1700 (4)	-	800	3000	2200	(7)	8	A, B, D	Q60
	PL	550	2200	1500	-	800	3000	3000	-	9	A, B, D	Q60
	PL-LO	550	2200	1500	-	800	3000	3000	-	9	A, B, D	Q60
	SL-R75	550	2200	2100 (4)	-	800	3000	2200	(7)	9	A, B, D	Q60
	SUN-R75	550	2200	2100 (4)	-	800	3000	2200	(7)	9	A, B, D	Q60
AR 61	PL-N-1	550	1500	-	-	800	3000	-	-	9	A, B, D	-
	PL-N-2	550	1500	-	-	800	3000	-	-	9	A, B, D	-
	SILENCIO	550	1500	-	-	800	3000	-	-	12	A, B, D	-
TZ R75	TIZO	550	2200	1200	-	800	2500	1900	(6)	13	A, B, D	Q60
	TSW	550	2200	1200	-	800	3000	2200	-	13	A, B, D	Q60
	TZ	550	2200	1800	-	800	3000	1900	(6)	12	A, B, D	Q60
R48	GE/GE-SE	550	2200	1200	-	800	2500	1900	-	10	A, B, D	Q60
	JS	550	2200	1100	(5)	800	2500	1900	(6)	8	A, B, D	Q60
	MS	550	2200	1100	(5)	800	2500	1900	(6)	8	A, B, D	Q60
	PARIS	550	2200	1700	(5)	800	2500	1900	(7)	8	A, B, D	Q60
	SL-R48	550	2200	2100 (4)	-	800	2500	1900	(7)	9	A, B, D	Q60
	SUN-R48	550	2200	2100 (4)	-	800	2500	1900	(7)	9	A, B, D	Q60

All dimensions in mm.

Smaller or larger sashes can be used with some models providing technical issues have been clarified.

(1) min. width 650 mm from height 2000 mm.
(2) min. width 850 mm from height 3000 mm.

(3) additionally with screw slat from width 1200 mm.
(4) additionally with screw slat from width 1700 mm.

(5) support profile
(5.1) support profile 800

(6) pin
(7) screw slat

Minimum width for motor drive 650 mm up to a sash height 2000 mm.
For sash heights over 2000 mm, the rail is extended by the width of the motor.

From a sash width of 850 mm to a sash height of 3000 mm, there is no need for the rail to protrude.
In the case of larger dimensions, rails can be designed on request.

Maximum sizes

Frame	Name of model	Width min.	Width max.	Vertical cross-panel from width	Instead of vertical cross-panel	Height min.	Height max.	Horizontal cross-panel from height	Instead of horizontal cross-panel	Weight kg / m²	Lower guide type	Horizontal cross-panel / vertical cross-panel
SL	SL	550	2100	-	-	800	3000	-	-	9	A, B, D	-
SL 12	MATRICO-SL12	550	1250	-	-	800	3000	-	-	9	A, B, D	-
	PLANO-SL12	550	1500	-	-	800	3000	-	-	9	A, B, D	-
	VARIO-SL12	550	1500	-	-	800	3000	-	-	9	A, B, D	-
	NATURE-SL12	550	1600	-	(5.1)	800	3000	-	-	15	A, B, D	-
SUN R70	SUN-P70	550 (2)	2100	-	-	800	4000	-	-	14	A, B, C, D	-
CADROTEX	CADROTEX	550 (2)	2300	-	-	800	5000	3500	-	11	A, B, C, D	☐ 30×15
MAX15	JS-MAX15	550	2200	1100	-	800	3000	1900	(6)	11	A, B, C, D	Q60
	JZN-MAX15	550	2200	1100	-	800	3000	-	-	12	A, B, C, D	☐ 30×15
	MATRICO-MAX15	550	1500	-	-	800	3000	-	-	10	A, B, C, D	☐ 30×15
	MS-MAX15	550	2200	1100	-	800	3000	1900	(6)	11	A, B, C, D	Q60
	PARIS-MAX15	550	2200	1700 (3)	-	800	3000	1900	(7)	11	A, B, C, D	Q60
	SL-MAX15	550	2200	2100 (3)	-	800	3000	1900	(7)	12	A, B, C, D	Q60
	SUN-MAX15	550	2200	2100 (3)	-	800	3000	1900	(7)	12	A, B, C, D	Q60
	NATURE-MAX15	550	1600	1200	(5)	800	3000	1900	(7)	16	A, B, C, D	Q60
MAX28	LINEA-MAX28	550	1500	-	-	800	3000	-	-	14	A, B, C, D	-
	MATRICO-MAX28	550	1500	-	-	800	3000	-	-	10	A, B, C, D	-
	PLANO-MAX28	550	1500	-	-	800	3000	-	-	10	A, B, C, D	-
	VARIO-MAX28	550	1500	-	-	800	3000	-	-	10	A, B, C, D	-

All dimensions in mm.

Smaller or larger sashes can be used with some models providing technical issues have been clarified.

(1) min. width 650 mm from height 2000 mm.
(2) min. width 850 mm from height 3000 mm.

(3) additionally with screw slat from width 1200 mm.
(4) additionally with screw slat from width 1700 mm.

(5) support profile
(5.1) support profile 800

(6) pin
(7) screw slat

Minimum width for motor drive 650 mm up to a sash height 2000 mm.
For sash heights over 2000 mm, the rail is extended by the width of the motor.

From a sash width of 850 mm to a sash height of 3000 mm, there is no need for the rail to protrude.
In the case of larger dimensions, rails can be designed on request.

Maximum sizes

Frame	Name of model	Width min.	Width max.	Vertical cross-panel from width	Instead of vertical cross-panel	Height min.	Height max.	Horizontal cross-panel from height	Instead of horizontal cross-panel	Weight kg / m²	Lower guide type	Horizontal cross-panel / vertical cross-panel
MAX37	JS-MAX37	550	2200	1100	-	800	3000	2200	(6)	11	A, B, C, D	Q60
	MS-MAX37	550	2200	1100	-	800	3000	2200	(6)	11	A, B, C, D	Q60
	PARIS-MAX37	550 (2)	2200	1700 (3)	-	800	3500	2200	(7)	11	A, B, C, D	Q60
	SL-MAX37	550 (2)	2200	2100 (3)	-	800	3500	2200	(7)	11	A, B, C, D	Q60
	SUN-MAX37	550 (2)	2200	2100 (3)	-	800	3500	2200	(7)	11	A, B, C, D	Q60
MAX48	SUN-MAX48V	650	1500	-	-	800	3000	-	-		A, B, C, D	-
MAX70	JS-MAX70	550 (2)	2200	1100	-	800	5500	3000	(6)	16	C	Q60
	JZN-MAX70	550 (2)	2200	1100	-	800	5500	-	-	16	C	☐ 50×25
	MATRICO-MAX70	550 (2)	1500	-	-	800	5500	-	-	14	C	☐ 50×25
	MS-MAX70	550 (2)	2200	1100	-	800	5500	3000	(6)	16	C	Q60
	PARIS-MAX70	550 (2)	2200	1700	-	800	5500	3000	(6)	16	C	Q60
	PLANO-MAX70	550 (2)	1500	-	-	800	5500	3000	-	14	C	☐ 50×25
	SL-MAX70	550 (2)	2200	2100	-	800	5500	3000	(6)	16	C	Q60
	SUN-MAX70	550 (2)	2200	2100	-	800	5500	3000	(6)	16	C	Q60
	VARIO-MAX70	550 (2)	1500	-	-	800	5500	3000	-	14	C	☐ 50×25

All dimensions in mm.

Smaller or larger sashes can be used with some models providing technical issues have been clarified.

(1) min. width 650 mm from height 2000 mm.
(2) min. width 850 mm from height 3000 mm.

(3) additionally with screw slat from width 1200 mm.
(4) additionally with screw slat from width 1700 mm.

(5) support profile
(5.1) support profile 800

(6) pin
(7) screw slat

Minimum width for motor drive 650 mm up to a sash height 2000 mm.
For sash heights over 2000 mm, the rail is extended by the width of the motor.

From a sash width of 850 mm to a sash height of 3000 mm, there is no need for the rail to protrude.
In the case of larger dimensions, rails can be designed on request.

Sash and element calculation

Standard

Calculate element width:

- For carrier and cover: cover width + 2×2 mm) for cover cap
- For basic angle / ceiling installation: panel width – 20 mm

1/R

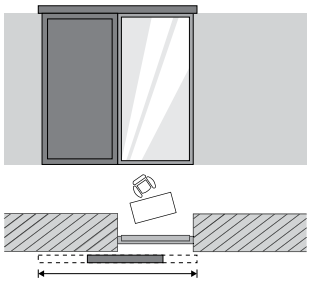

Sash width
Clear width + (2× 40 mm = projection at side)

Cover width
Clear width + (1× sash width) + 70 mm

1/L

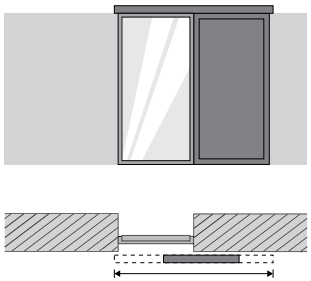

Sash width
Clear width + (2× 40 mm = projection at side)

Cover width
Clear width + (1× sash width) + 70 mm

1/L-R

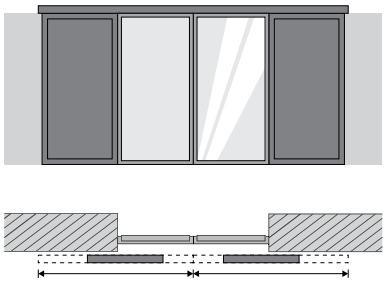

Sash width
Clear width + (2× 40 mm = projection at side) ÷ 2

Cover width
Clear width + (2× sash width) + 30 mm

2/RR

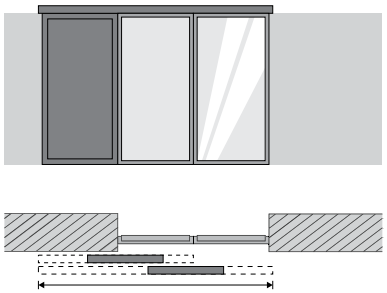

Sash width
Clear width + (2× 40 mm = projection at side) ÷ 2

Cover width
Clear width + (1× sash width) + 70 mm

2/LL

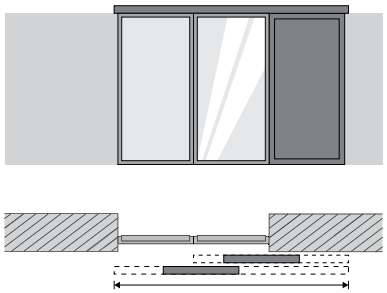

Sash width
Clear width + (2× 40 mm = projection at side) ÷ 2

Cover width
Clear width + (1× sash width) + 70 mm

2/L-RR

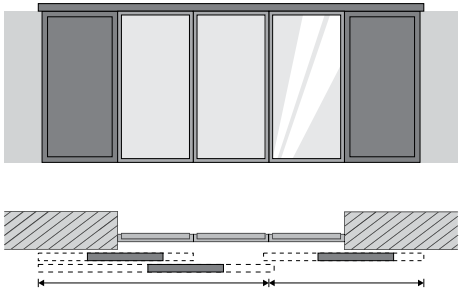

Sash width
Clear width + (2× 40 mm = projection at side) + (2× R) ÷ 3

Cover width
Clear width + (2× sash width) + 30 mm

2/LL-R

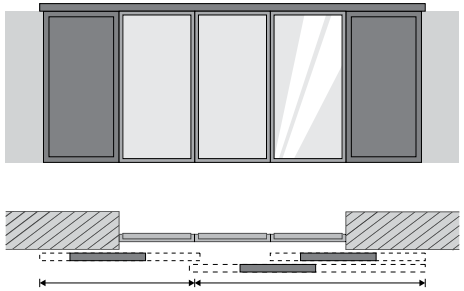

Sash width
Clear width + (2× 40 mm = projection at side) + (2× R) ÷ 3

Cover width
Clear width + (2× sash width) + 30 mm

2/LL-RR

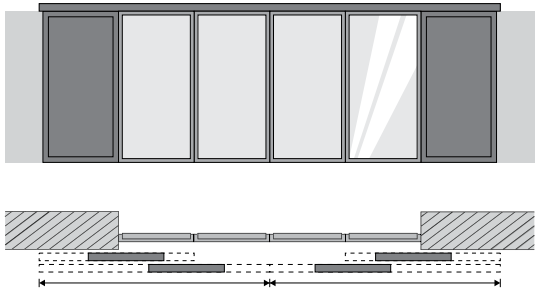

Sash width
Clear width + (2× 40 mm = projection at side) + (2× R) ÷ 4

Cover width
Clear width + (2× sash width) + 30 mm

The stop diagrams are sketched as if viewed from inside. The term 2/LL-R stands for 2 rails, 2 sashes left (LL) and 1 sash right (R).

Dimension R = frame width (see frame overview)

Sash and element calculation

Standard

Calculate element width:

- For carrier and cover: cover width + 2×2 mm) for cover cap
- For basic angle / ceiling installation: panel width – 20 mm

3/RRR

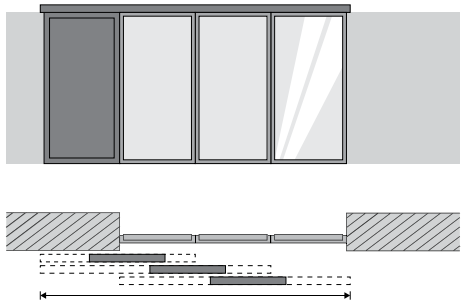

Sash width
Clear width + (2× 40 mm = projection at side) + (2× R) ÷ 3

Cover width
Clear width + (1× sash width) + 70 mm

3/LLL

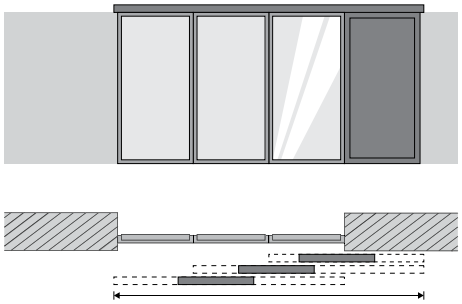

Sash width
Clear width + (2× 40 mm = projection at side) + (2× R) ÷ 3

Cover width
Clear width + (1× sash width) + 70 mm

3/L-RRR

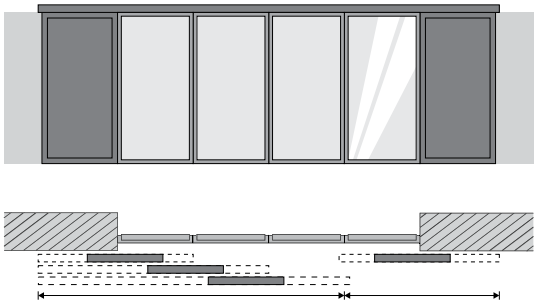

Sash width
Clear width + (2× 40 mm = projection at side) + (3× R) ÷ 4

Cover width
Clear width + (2× sash width) + 30 mm

3/LLL-R

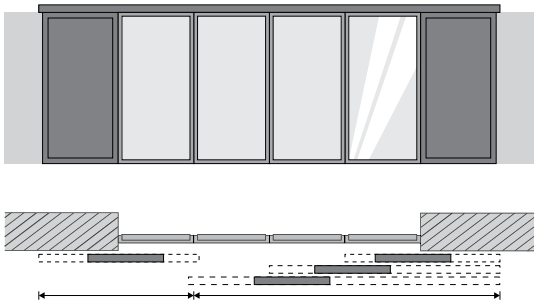

Sash width
Clear width + (2× 40 mm = projection at side) + (3× R) ÷ 4

Cover width
Clear width + (2× sash width) + 30 mm

3/LL-RRR

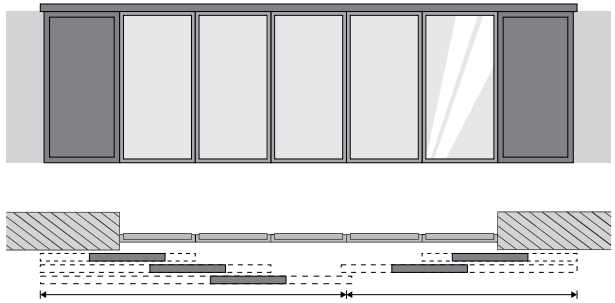

Sash width
Clear width + (2× 40 mm = projection at side) + (4× R) ÷ 5

Cover width
Clear width + (2× sash width) + 30 mm

3/LLL-RR

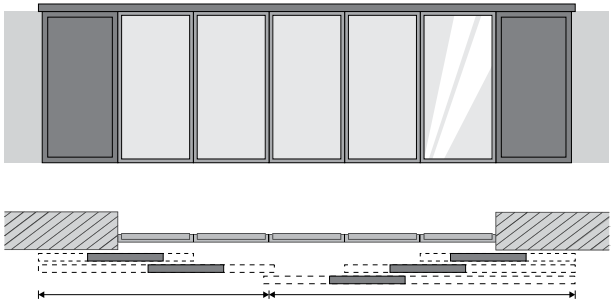

Sash width
Clear width + (2× 40 mm = projection at side) + (4× R) ÷ 5

Cover width
Clear width + (2× sash width) + 30 mm

3/LLL-RRR

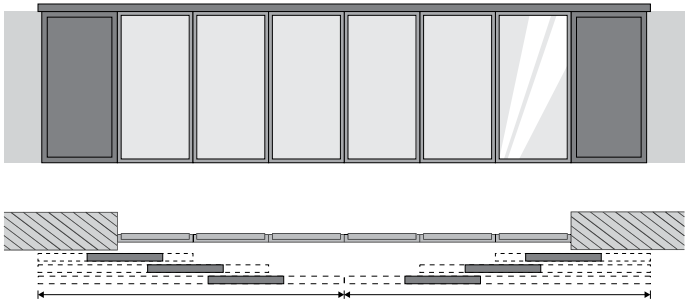

Sash width
Clear width + (2× 40 mm = projection at side) + (4× R) ÷ 6

Cover width
Clear width + (2× sash width) + 30 mm

Dimension R = frame width (see frame overview)

Top suspension

Carrier and cover

ECO 60 | 0-60 kg

System A75

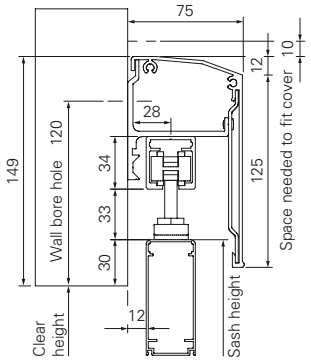

R 75

System A105

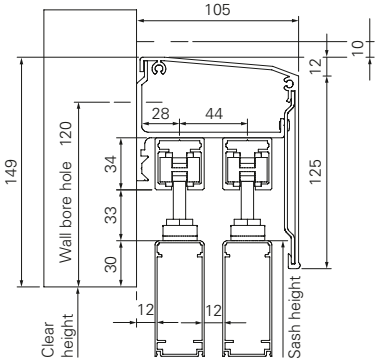

R 75

System A148

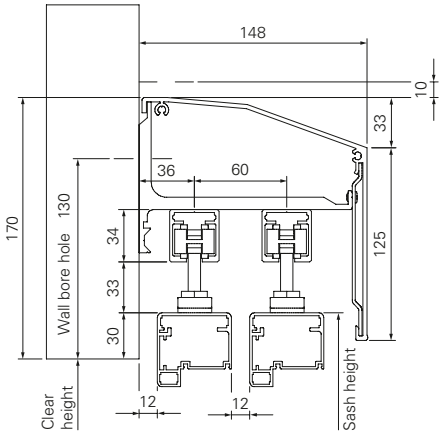

MAX37

System A195

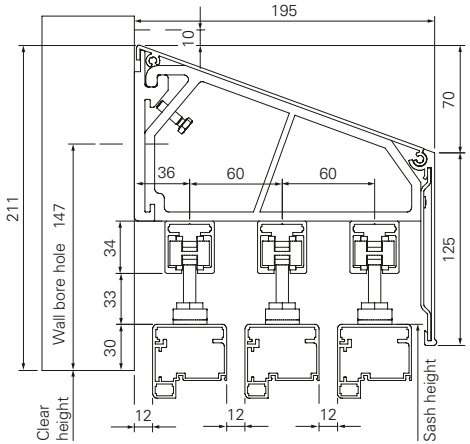

MAX37

ECO 100 | 61-100 kg

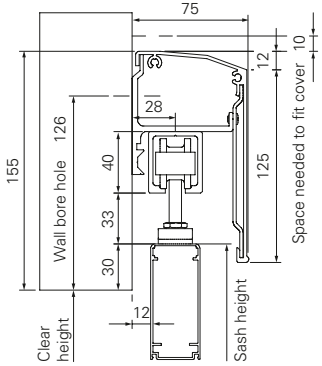

R 75

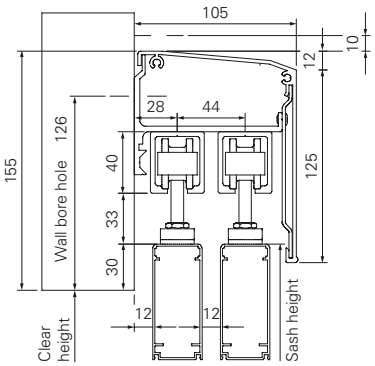

R 75

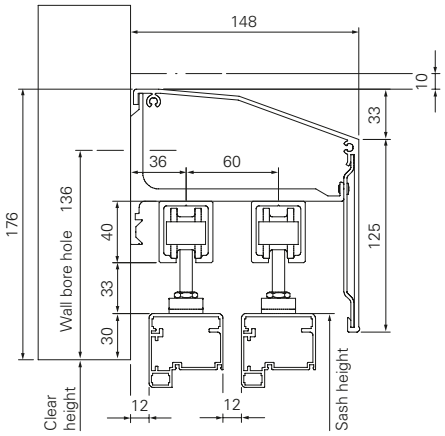

MAX37

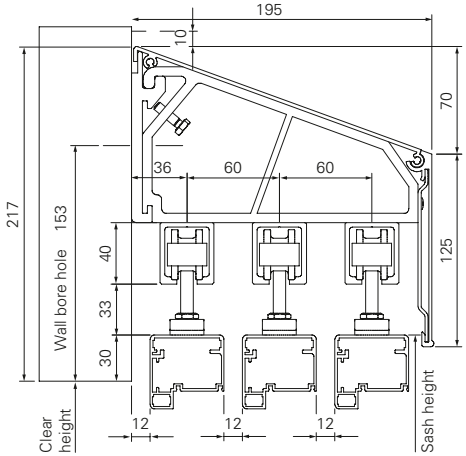

MAX37

Top suspension

Basic angle bracket installation | ECO 60 | 0 - 60 kg

- Maximum distance between the fastening points = 800 mm
- Maximum distance from end of rail = 200 mm
- Angle calculation = Rail length / 800 mm + 1 angle

(e.g.: 4 m rail = 4000 mm / 800 mm = 5 + 1 = 6 angles)

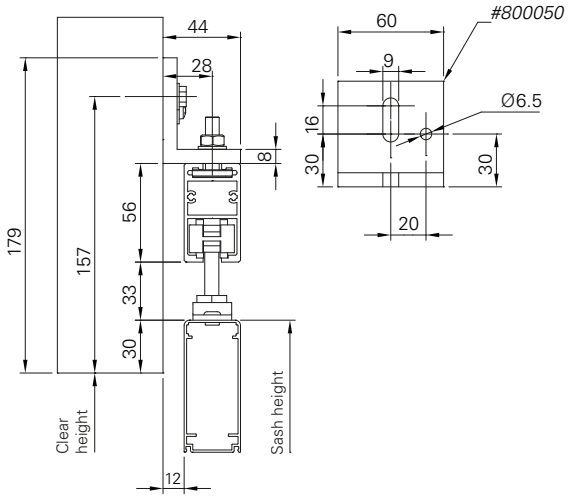

R 75

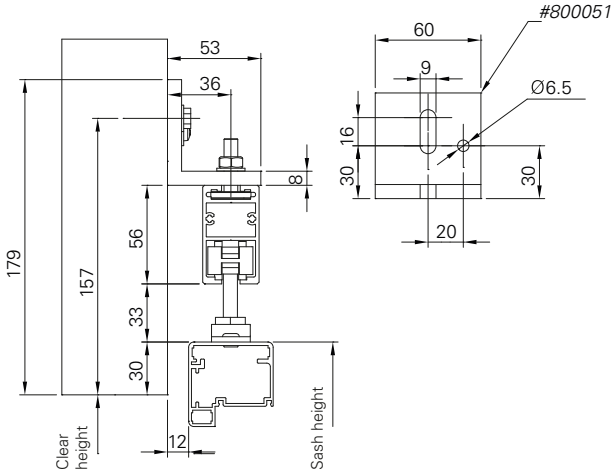

MAX 37

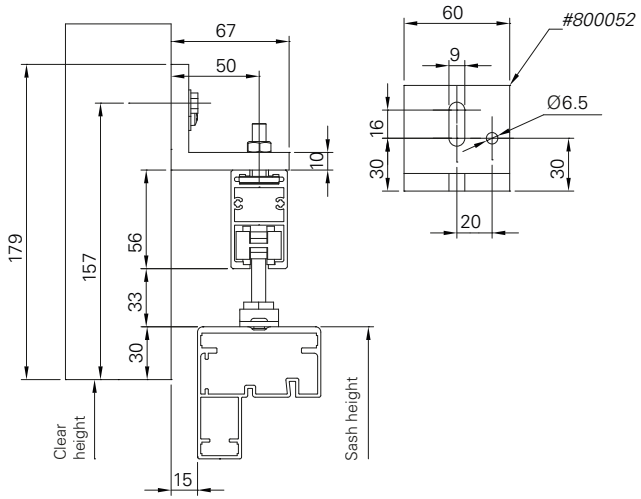

MAX 70

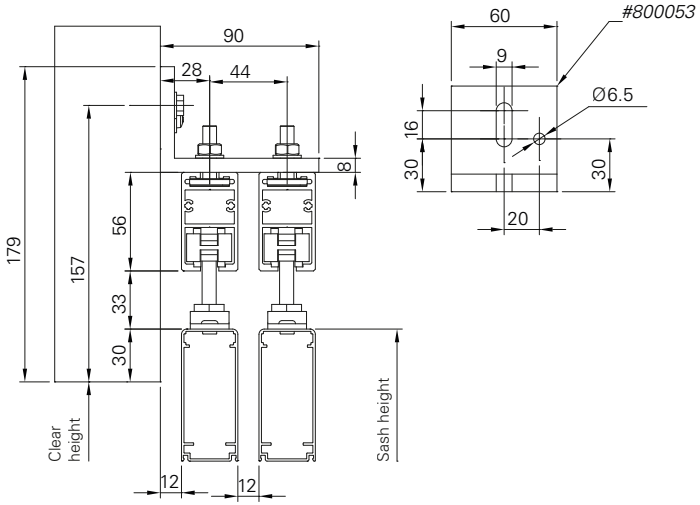

R 75

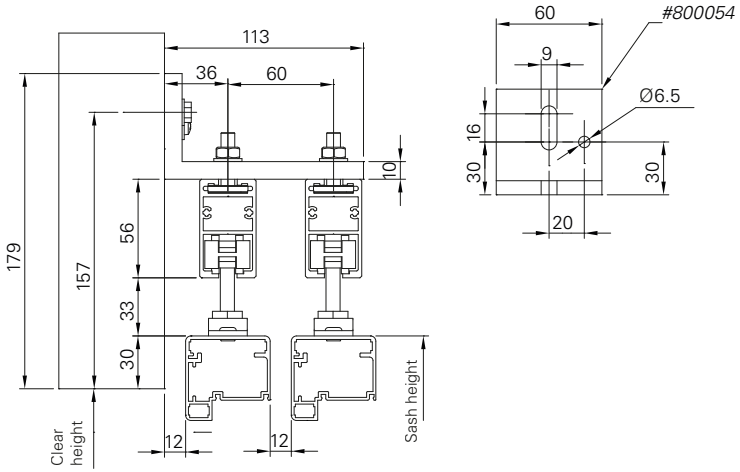

MAX 37

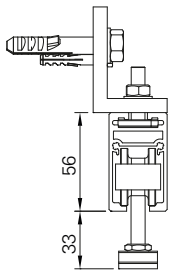

Alternative rail

ECO 100 | 61 - 100 kg

Top suspension

Ceiling installation | Trolley ECO 100 needed

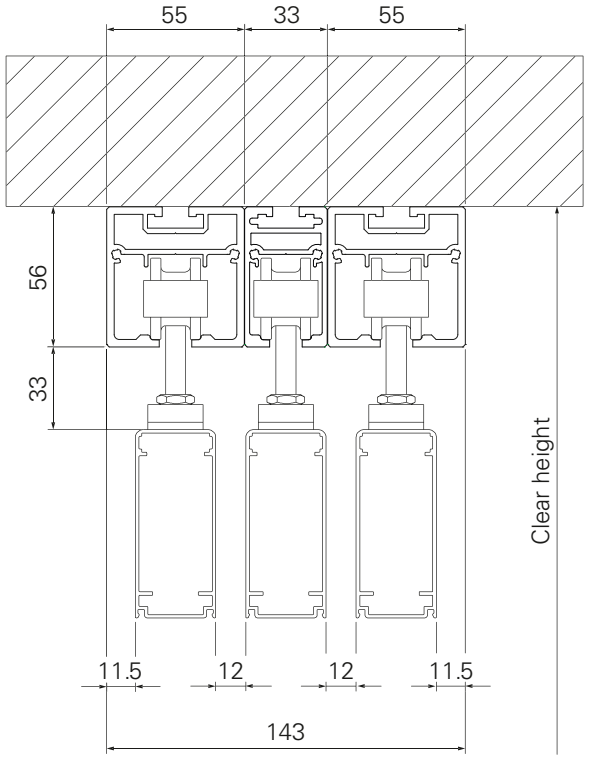

R 75

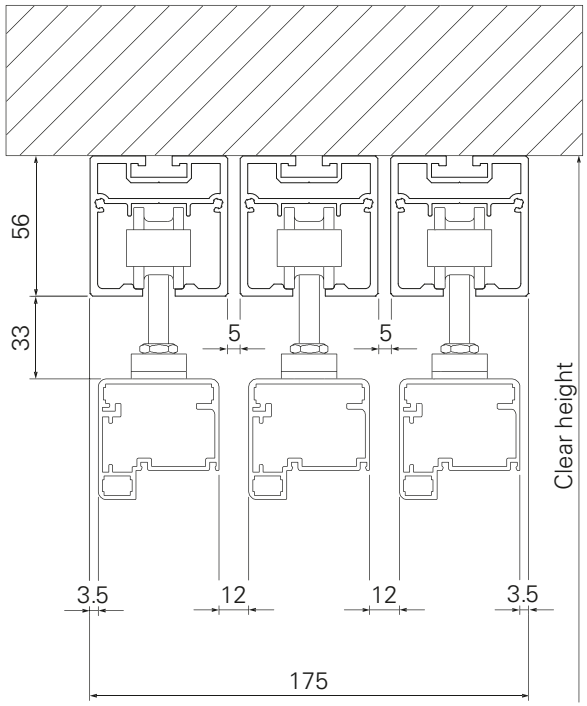

MAX 37

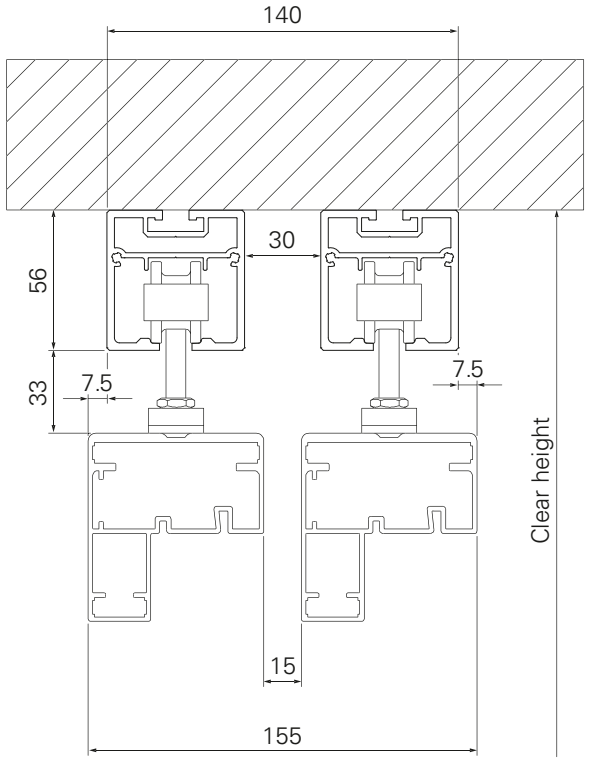

MAX 70

System classification table

	Sash weight up to 60 kg (weight table)			Sash weight up to 100 kg (weight table)		
Diagram	Depth 32	Depth 48	Depth 70	Depth 32	Depth 48	Depth 70
1/L	A75/60	A75/60	A105/60	A75/100	A75/100	A105/100
1/R	A75/60	A75/60	A105/60	A75/100	A75/100	A105/100
1/L-R	A75/60	A75/60	A105/60	A75/100	A75/100	A105/100
2/LL	A105/60	A148/60	A195/60	A105/100	A148/100	A195/100
2/RR	A105/60	A148/60	A195/60	A105/100	A148/100	A195/100
2/LL-R	A105/60	A148/60	A195/60	A105/100	A148/100	A195/100
2/L-RR	A105/60	A148/60	A195/60	A105/100	A148/100	A195/100
2/LL-RR	A105/60	A148/60	A195/60	A105/100	A148/100	A195/100
3/LLL	A148/60	A195/60		A148/100	A195/100	
3/RRR	A148/60	A195/60		A148/100	A195/100	
3/LLL-R	A148/60	A195/60		A148/100	A195/100	
3/L-RRR	A148/60	A195/60		A148/100	A195/100	
3/LLL-RR	A148/60	A195/60		A148/100	A195/100	
3/LL-RRR	A148/60	A195/60		A148/100	A195/100	
3/LLL-RRR	A148/60	A195/60		A148/100	A195/100	

Trolley selection table for MAX70 models

INFO

- The ECO 60 trolleys (up to 60 kg) can be used for all sliding shutters.
  ECO 100 trolley
  (up to 100 kg) must be used for some MAX 70 models as of a certain size (see diagram below).
- When using ceiling rail runners, ECO 100 trolleys (up to 100 kg) are generally used!

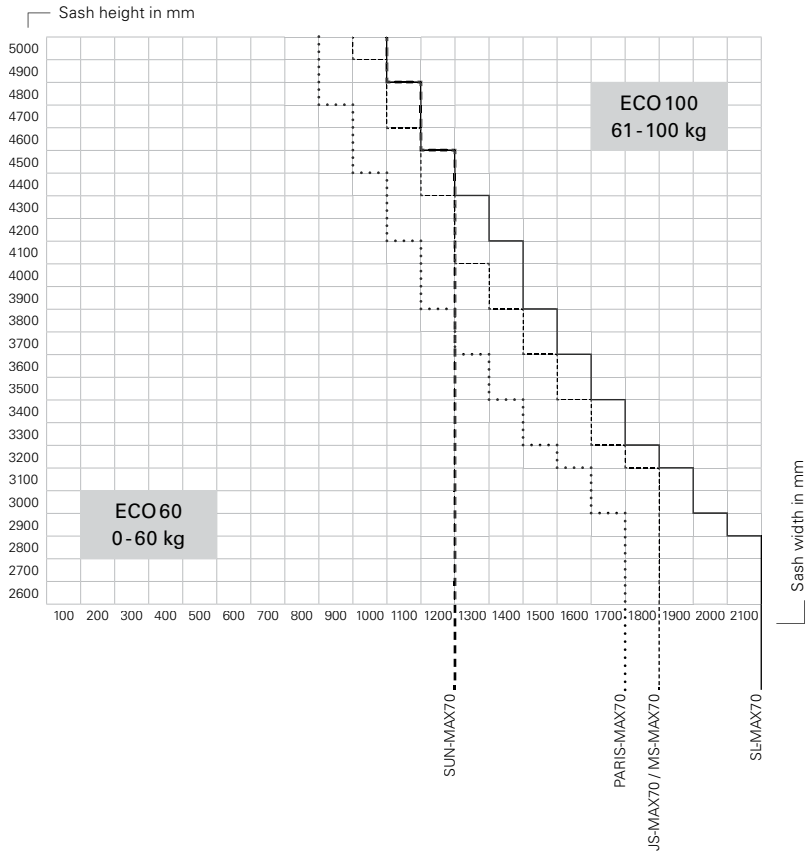

Bottom guide

Type A with punctiform guide (mounting holes)

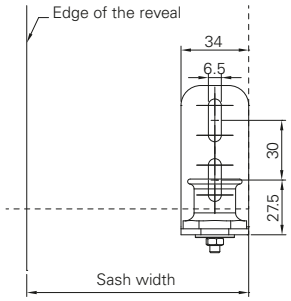

Front view

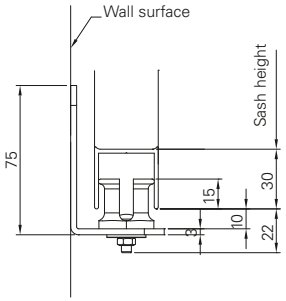

Side view

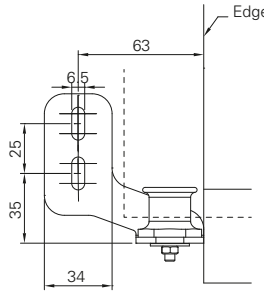

Front view

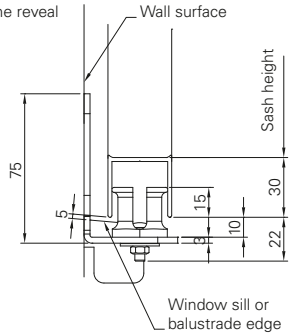

Side view

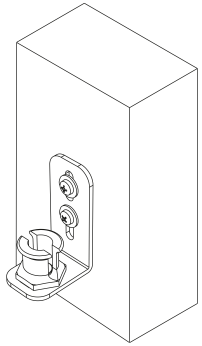

Punctiform guide

Reinforced version, double rails with sash depths of 70 mm and 3 rails with sash depths of 48 mm:

Front view

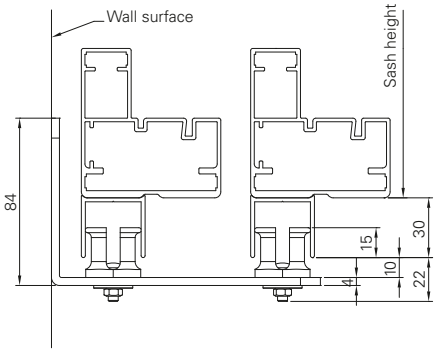

Side view

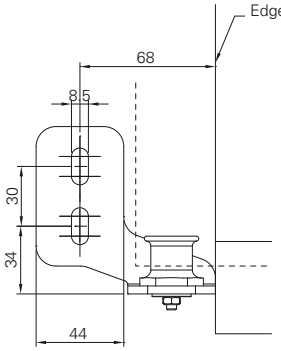

Front view

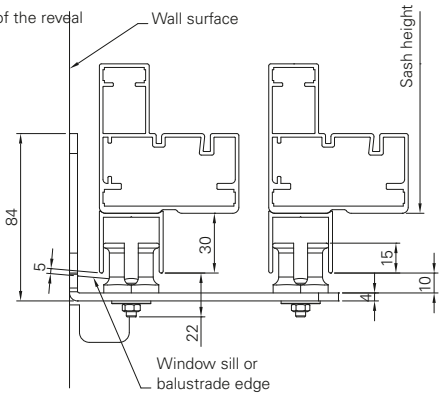

Side view

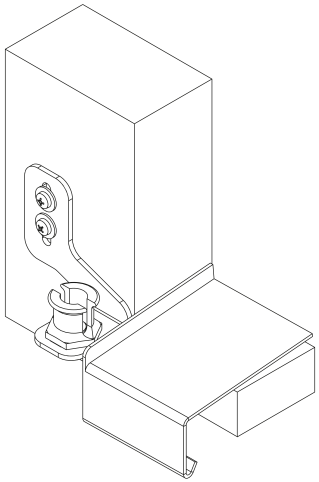

Punctiform guide offset

Bottom guide

Type B with continuous guide (mounting holes)

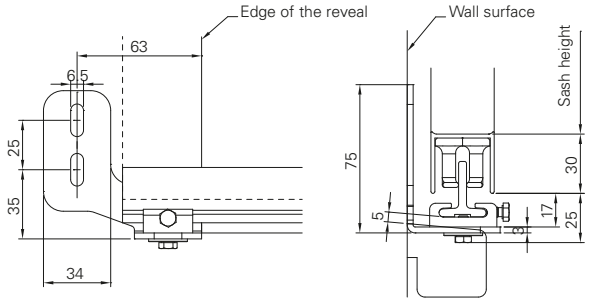

Front view

Side view

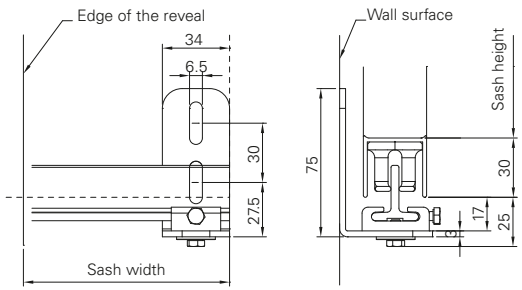

Front view

Side view

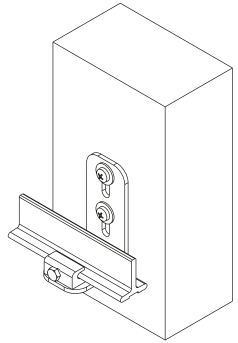

Continuous guide

Reinforced version, double rails with sash depths of 70 mm and 3 rails with sash depths of 48 mm:

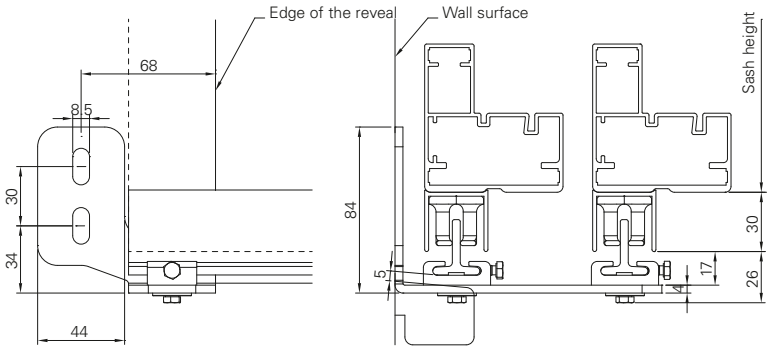

Front view

Side view

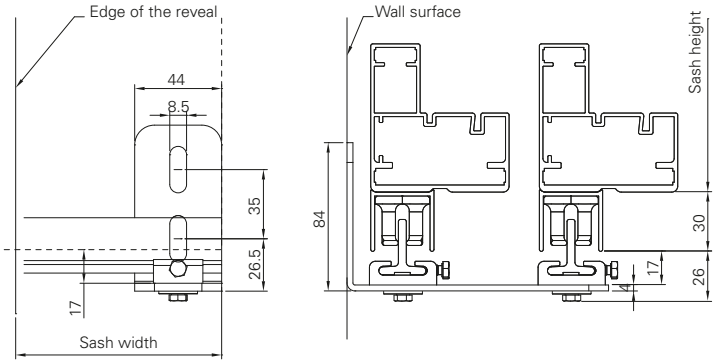

Front view

Side view

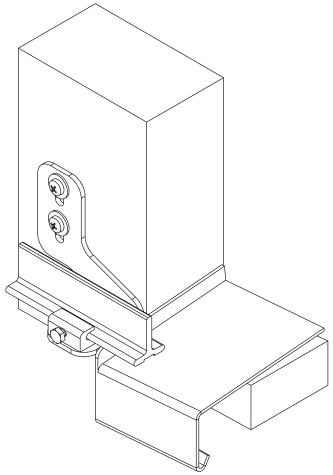

Continuous guide offset

Bottom guide

Type A and Type B with shutter distance to reveal/shutter overhang

Note:
- For sash widths > 1000 mm, additional wall brackets are mandatory for the parking position of the opened sash!

Type A | Punctiform guide

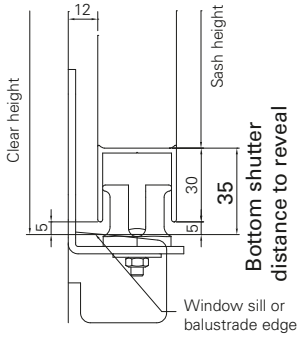

Type A 010

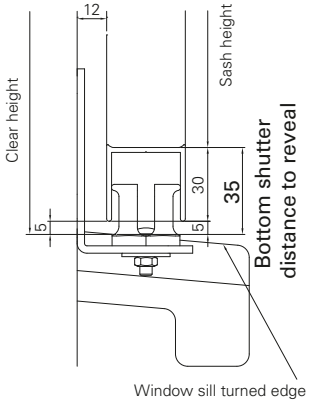

Type A 020

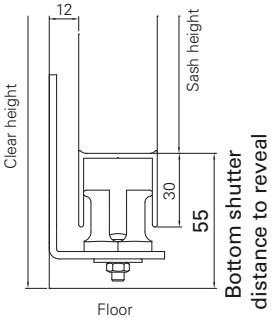

Type A 025

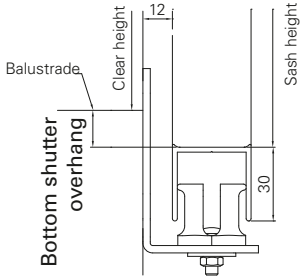

Type A 030

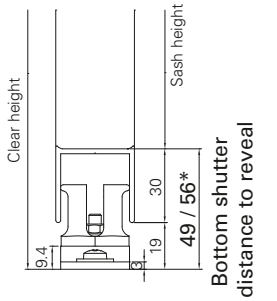

*at multirail or double shutter guide

Floor guide

Type B | Continuous guide

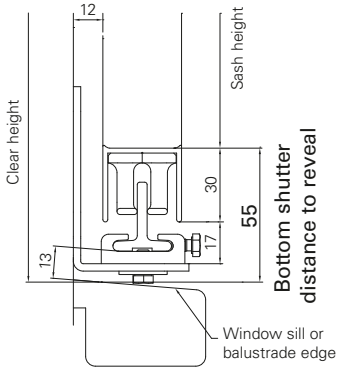

Type B 010

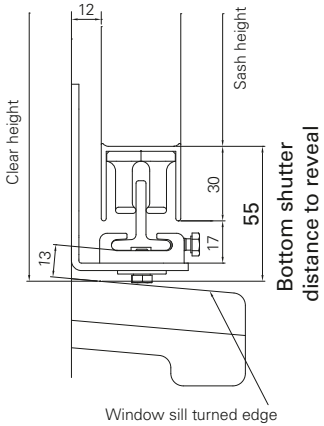

Type B 020

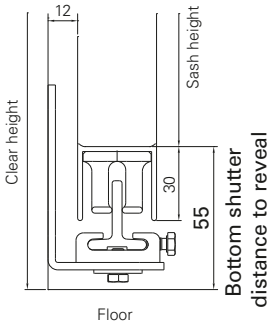

Type B 025

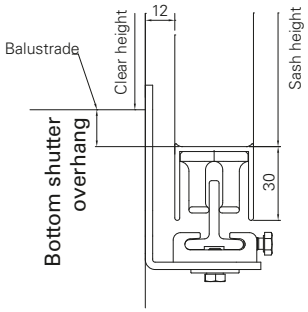

Type B 030

Bottom guide

Type C "reinforced" with continuous guide
(frame depth min. 48 mm)

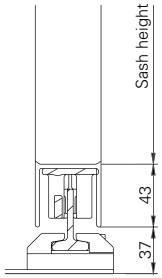

Side view

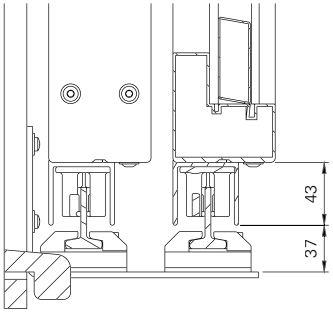

Side view

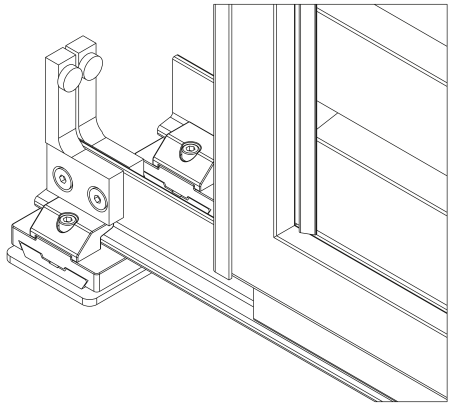

Continuous guide
"reinforced"

Type D floor installation (with aluminium bracket 30×30×4 mm)

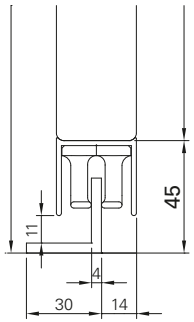

Side view

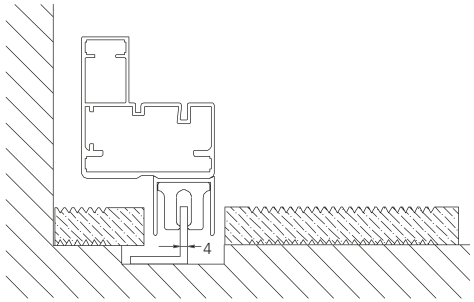

Side view

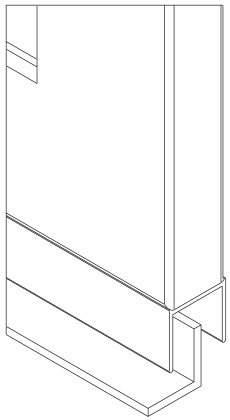

Continuous guide
Floor installation

Frame width and depth

R75

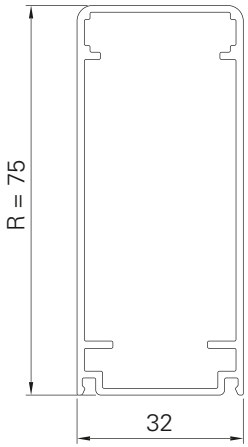

R48

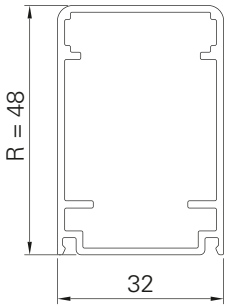

SL

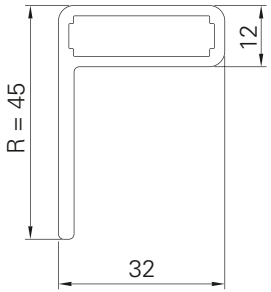

SL12

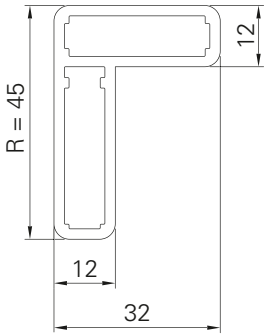

SUNQ70

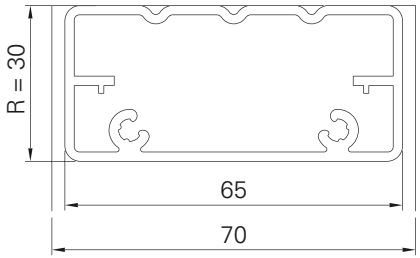

MAX15

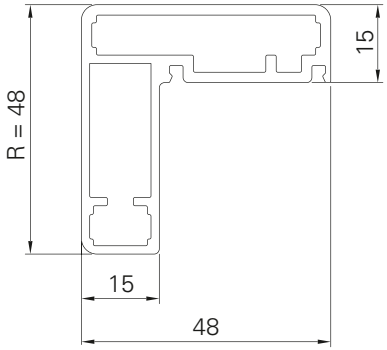

MAX28

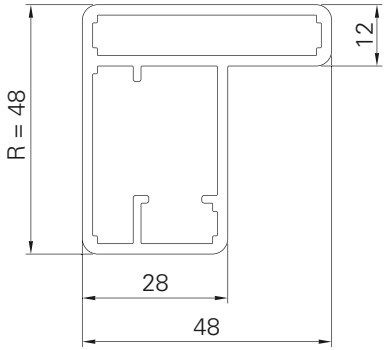

MAX37

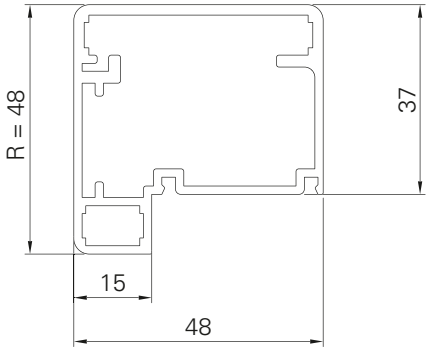

MAX70

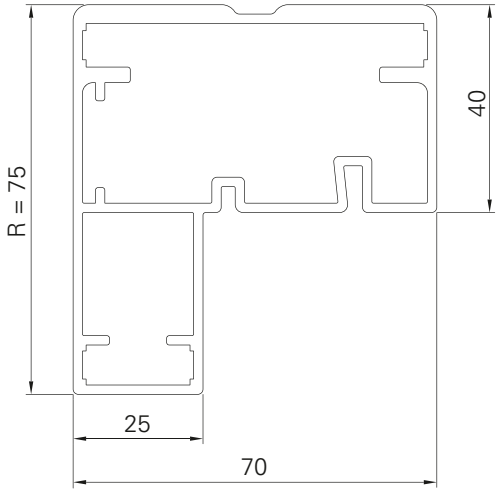

Frame width and depth

AR61-B1

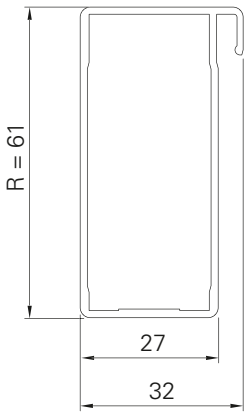

AR61-B2

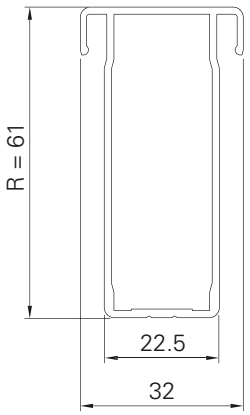

AR61-SE

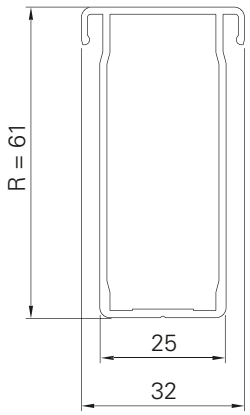

MAX48

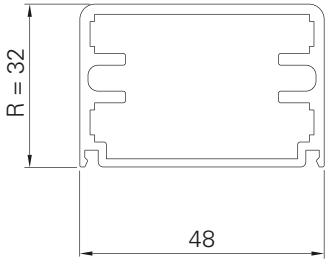

SN75

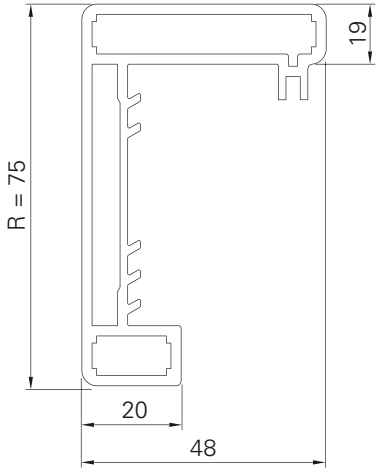

Order form | **Sliding shutters**

Date	Page	of
Your address and signature		
Your customer number		
Your processor		
Preferred delivery date		
Order		
Sliding shutter model		
Ocean Line plus	☐ yes	
Hardware installed	☐ yes	

Order-related details		
Guide bottom	☐	Type A *punctiform*
	☐	Type B *continuous*
	☐	Type C *reinforced, continuous*
	☐	Type D *alu bracket 30×30×4 mm*
Suspension top	☐	Carrier and cover *(as specified)*
	☐	Basic angle bracket *max. depth: 2×32 / 2×48 / 1×70 mm*
	☐	Al flat *5×80/120/200 mm*
	☐	Ceiling installation *Rail D33N/D55N*

VOLETRONIC – Motorisation		
	☐	*without electric drive*
230 V	☐	*without wireless remote control*
230 V	☐	*with wireless remote control*
Solar 12 V	☐	*with wireless remote control*

Transmitter	*Wireless System*		*Quantity*
Black Pearl	☐	1-channel	.....
	☐	5-channel	.....
	☐	8-channel	.....
HTM-8	☐	8-channel	.....
	☐	HTM wall bracket	.....
HSN	☐	1-channel	.....
	☐	7-channel	.....

☐ OFFER ☐ ORDER

	Surface	*Colour system*	*Colour n°*
Cover / Carrier profile	☐ FSM	☐ RAL	
	☐ Various	☐ NCS	
		☐ VSR	
Rail	☐ FSM	☐ RAL	
	☐ Various	☐ NCS	
		☐ VSR	
Wall bracket bottom	☐ FSM	☐ RAL	
	☐ Various	☐ NCS	
		☐ VSR	
Frame	☐ FSM	☐ RAL	
	☐ Wood finish	☐ NCS	
	☐ Various	☐ VSR	
Insert	☐ FSM	☐ RAL	
	☐ Wood finish	☐ NCS	
	☐ Various	☐ VSR	

Models with real-wood slats		Slat height
**Type of wood: Siberian larch, planed surface, other woods available on request*		
	☐ NATURE-MAX15	60 mm
	☐ NATURE-SL12	☐ 40 mm
		☐ 60 mm
		☐ 80 mm
		☐ 100 mm
Pretreatment	☐ Untreated	☐ Glazed on reverse

▸ *Please enter items on next page!*

EHRET

Tel. +49 (0) 78 22/439-0
Fax +49 (0) 78 22/439-217
www.ehret.com

order by e-mail

request offer by e-mail

print order form

☐ **Follow-up order**

The original order no. must be specified in the event of follow-up deliveries:

Additional information | **Sliding shutters**

Item	Additional information

Order form | **Sliding shutters**

Date Page of Order Your customer number

Position	Number of elements	Stop diagram	Sash weight up to 60/100 kg *(see table p. 11)*	Carrier system *A75 / A105 / A148 / A195*	Clear		Sash projection		Bottom shutter distance to reveal Type *(see drawing p. 14)*	Sash, finished size *Height not including shutter guide profile*		Element width	Wall clearance *12/15/? mm*	Motor side L/R with E drive *viewed from inside*	Shell handle height	Middle closure	Bolt					Remark
																		length				
					Width	Height	On the side	Top		Width	Height						preinstalled	400 mm	800 mm	1300 mm	According to customer specifications *in mm*	
																	☐	☐	☐	☐		
																	☐	☐	☐	☐		
																	☐	☐	☐	☐		
																	☐	☐	☐	☐		
																	☐	☐	☐	☐		
																	☐	☐	☐	☐		
																	☐	☐	☐	☐		
																	☐	☐	☐	☐		
																	☐	☐	☐	☐		
																	☐	☐	☐	☐		
																	☐	☐	☐	☐		
																	☐	☐	☐	☐		
																	☐	☐	☐	☐		
																	☐	☐	☐	☐		
																	☐	☐	☐	☐		

EHRET GmbH
Bahnhofstrasse 14-18
D-77972 Mahlberg
Tel. +49(0)78 22/439-0
Fax +49(0)78 22/439-116
www.ehret.com

Made in Germany

© 01.2021 EHRET GmbH | F09.E | Subject to technical modifications